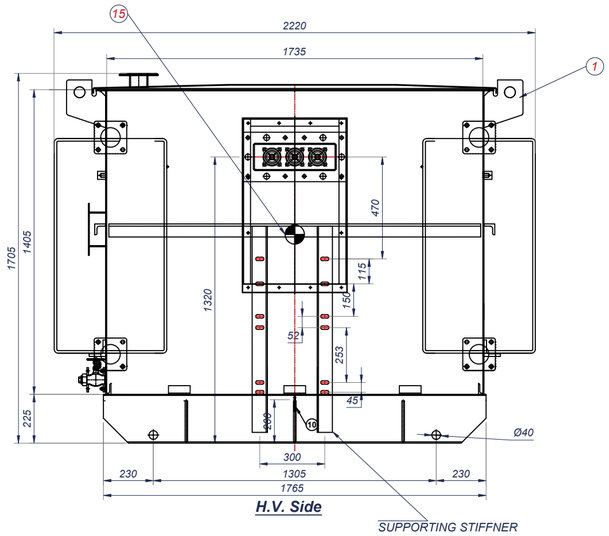

H.V. Side

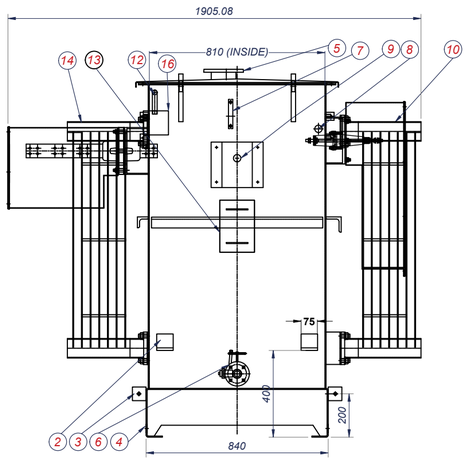

Tapping Switch Side

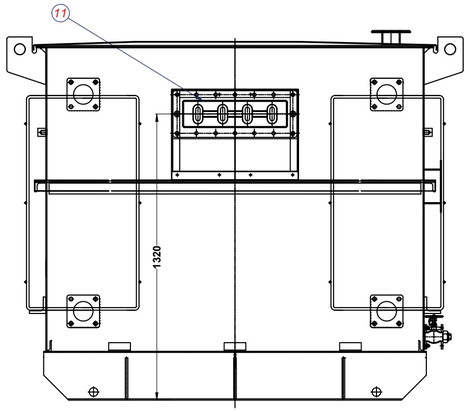

L.V. Side

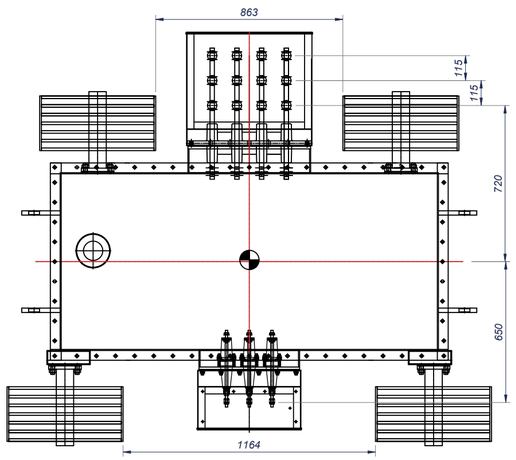

PLAN

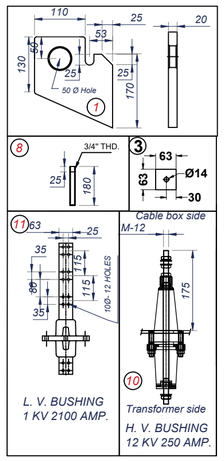

No.	TRANSFORMER FITTINGS
16	SILICA GEL BREATHER (non-Cobalt Chlorine) LOOSE SUPPLIED
15	LABEL OF CENTER OF GRAVITY
14	HEADER TYPE RADIATOR 900 CENTER , 7 PANELS
13	RATING AND DIAGRAM PLATE
12	AIR VENT PIPE
11	L.V. TERMINATIONS
10	H.V. TERMINATIONS
9	EXTERNALLY OPERATED OFF-CIRCUIT TAPPING SWITCH (ENCLOSED IN A PROTECTIVE MS COVER)
8	THERMOMETER POCKET
7	LIQUID LEVEL INDICATOR
6	1" BSP DRAIN VALVE & INTEGRAL SAMPLING DEVICE WITH PLUG
5	FILLING HOLE & COVER
4	BASE SKIDS DRILLED FOR ROLLER AXLES
3	EARTHING TERMINAL (MAT.-Stainless Steel) 6mm thk.
2	JACKING LUG
1	LIFTING LUG (Painted Yellow)

BOWERS JOB No.	-
RATING	1500 kVA
VOLTAGE RATIO	11000 / 415
AMPERES	78.73 / 2086.80
PHASES	3
FREQUENCY	50Hz
VECTOR GROUP	Dyn11

ESTIMATED WEIGHTS	KG
CORE AND WINDINGS	3045
COOLING LIQUID 1230 LTRS	1045
TOTAL WEIGHT	5070

NOTES :-
1- ALL DIMENSIONS, WEIGHT & VOLUME ARE SUB.TO ± 10% TOL.
2- THIS DRAWING SHOWS ONLY GENERAL DISPOSITION OF FITTINGS.
3- FOR THE SAKE OF CLARITY CERTAIN FITTINGS SHOWN IN ONE OR MORE VIEWS HAVE BEEN OMITTED FROM OTHER VIEWS.
4- HOWEVER LIMITATIONS AS PER SPEC. WILL BE MAINTAINED.
5- H.V. TERMINATIONS (GLAND PLATE MATERIAL=MS)
3 POLE CABLE BOX COMPLETE WITH UNDRILLED GLAND PLATE, SUITABLE FOR FULLY INSULATED DRY TERMINATIONS AND CAPABLE OF ACCEPTING 1x3 CORE 185 mm Sq. OR 3x1 CORE 300 mm Sq. CABLES ENTERING FROM BELOW. INSULATING MATERIALS, CABLE GLANDES AND CABLE LUGS ARE NOT INCLUDED.
6- L.V. TERMINATIONS (GLAND PLATE MATERIAL= AL.)
4 POLE AIR INSULATED CABLE BOX COMPLETE WITH UNDRILLED GLAND PLATE AND CAPABLE OF ACCEPTING 12x1 CORE CABLES UP TO 630 mm ENTERING FORM BELOW. CABLE TERMINATION KITS, GLANDS AND CABLE LUGS ARE NOT INCUDED.
7- Paint Finish To ISO12944-2 Category C4 With a Dark Grey Semi Gloss Finish.

Bowers Electricals Ltd
Heanor Gate Road,
Heanor, Derbyshire. DE75 7GX
Tel: 01773 531531
enquiries@bowerselec.co.uk

DRG No. BE8604

GENERAL ARRANGEMENT OF 1500kVA 11000/415V BOWERS ENERGY SAVING TRANSFORMER (B.E.S.T.)

Drawn By:	Checked By:	Approved By:
T.B.	J.R.	J.C.

Job Number: -

Date: 11.05.2022

FIRST ANGLE

Scale:	Size:	Sheet:
1:20	A2	1/1

Rev No:	Revision Note:	Date:	Drn:	App:

Revision: 0

This drawing is COPYRIGHT and the property of Bowers Electricals Ltd. It must not be copied (in whole or in part) without prior written consent of the company. ©

TOLERANCE UNLESS OTHERWISE STATED
± 5mm FOR DIMENSIONS UP TO 250mm
± 10mm FOR DIMENSIONS UP TO 1000mm
± 20mm FOR DIMENSIONS OVER 1000mm

SYSTEM CERTIFICATION bmtrada ISO 9001 CERTIFICATION
UKAS MANAGEMENT SYSTEMS 0012